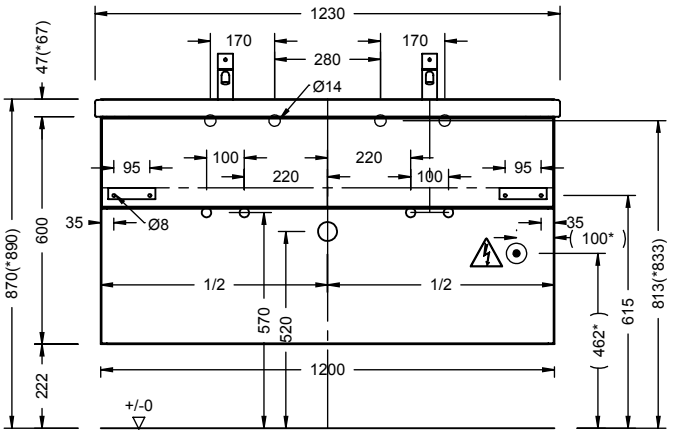

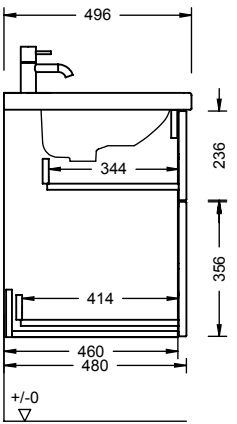

SEYR123
(*) SEZB123